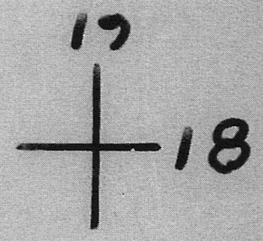
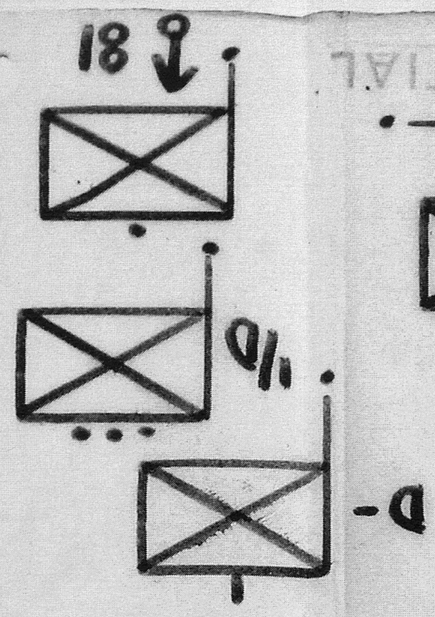
GROUP – 4
Downgraded at 3 year intervals;
Declassified after 12 years

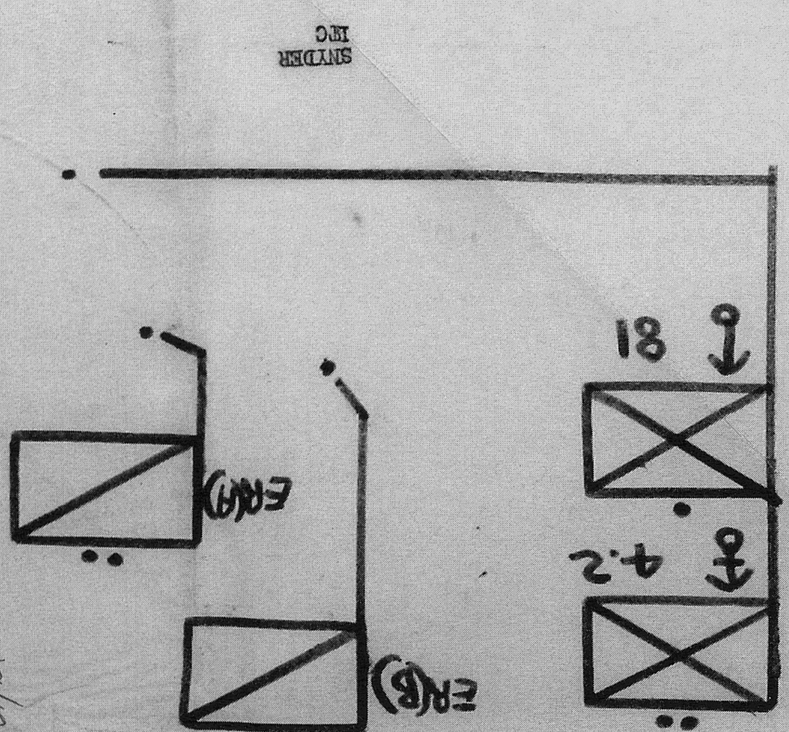
CONFIDENTIAL





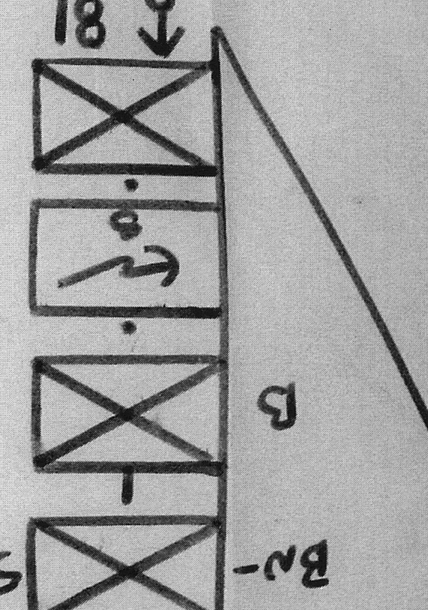
OFFICIAL

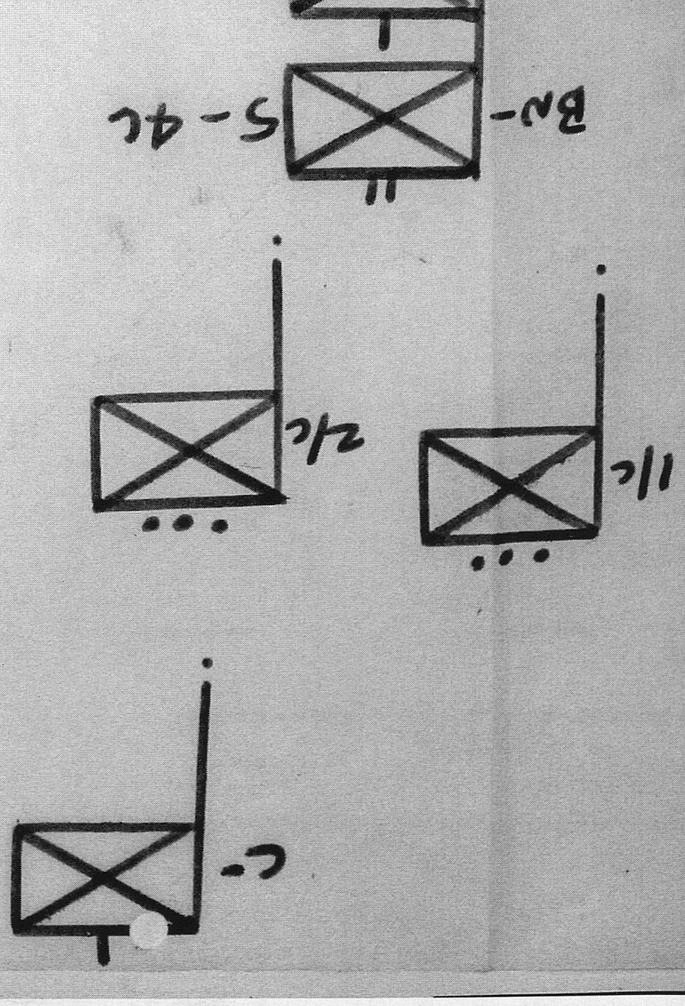
W. Lobert
DISNEY
S-3



19/2/69

SNYDER
IRC





CONFIDENTIAL

SITUATION OVERLAY
5/46 INF.
FSB GATOR (BS 570965)
192400 DEC 69