BARRETT

SERVICE MANUAL

MODEL HX-45-27 X 48

S/N 302286, ~~302287~~,
~~302288~~ & ~~302289~~

WHEN ORDERING PARTS
ALWAYS SPECIFY MODEL AND SERIAL NUMBER

PROPER SERVICE GUARANTEES EFFICIENCY
USE ONLY FACTORY MADE PARTS

PERIN [illegible], INC.
128 STARLITE STREET
SOUTH SAN FRANCISCO
CALIFORNIA

YOUR BARRETT DISTRIBUTOR

8014

PROCEDURE FOR ORDERING PARTS

In order to have your orders filled correctly and to avoid delay and unnecessary correspondence, it is suggested that the following procedures be adhered to:

1. Always order through your local Barrett representative.
2. Always list the part number and complete description of each part that you require.
3. When ordering wheels, always specify the type of tire material required (steel, rubber, or Barathane, etc.).
4. Always give the complete model and serial number of the truck for which the parts are required.

TERMS

Terms are net 30 days, F. O. B. Northbrook, Illinois.

RETURNED GOODS

Written authorization must be obtained from the factory before returning any material.

All shipments of returned goods must have shipping charges prepaid. Each item must be plainly tagged with senders name and address. Always refer to the Barrett order number under which the parts were furnished and state the reason for the return.

Unused parts will normally be accepted for full credit less a 10% restocking charge.

MODEL HX

SERVICE INSTRUCTIONS

1. HOW TO BLEED AN AIR BOUND HYDRAULIC UNIT.

Occasionally, an HX Truck will be turned on edge or upside down in transit causing the hydraulic system to become air bound along with possible loss of oil.

If, upon receipt of your truck, you find that the foot pedal does not give a full stroke or that the load gradually drifts down, you may assume that the system is air bound and must be bled.

The procedure for bleeding the system is simple. Push the steering handle all the way down to the floor and hold it in this position as shown in Photo No. 1646. This will elevate the front wheels and allow the lift foot treadle to go to the full bottom of the stroke. Pump the lift foot treadle with one hand while holding the release lever down with the other hand as shown in Photo No. 1646. About 12-15 strokes will bleed the air out of the system.

If the Truck does not give the full 4½" lift, unscrew the refill set screw (item 10, page 5, in Parts Catalog) and using a squirt-type oil can refill to this oil plug level with the recommended oil shown on the lubrication chart.

PHOTO No. 1646

2. REMOVAL OF HYDRAULIC UNIT FOR SERVICE.

One of the features of the Model HX Hydraulic Pallet Truck is the ease with which the hydraulic unit can be removed for service. The single package unit is mounted vertically in the truck and is removed in the following manner:

PHOTO No. 1620

Turn the Truck over with the steering handle extended in front. In doing this, be sure to avoid pulling the handle too far back and stretching the handle springs beyond their capacity. Insert a flat bar 3/16" x 1" x 8" long underneath both the front links as shown in Photo No. 1620. This will relieve the spring pressure on the pull rods from the hydraulic unit.

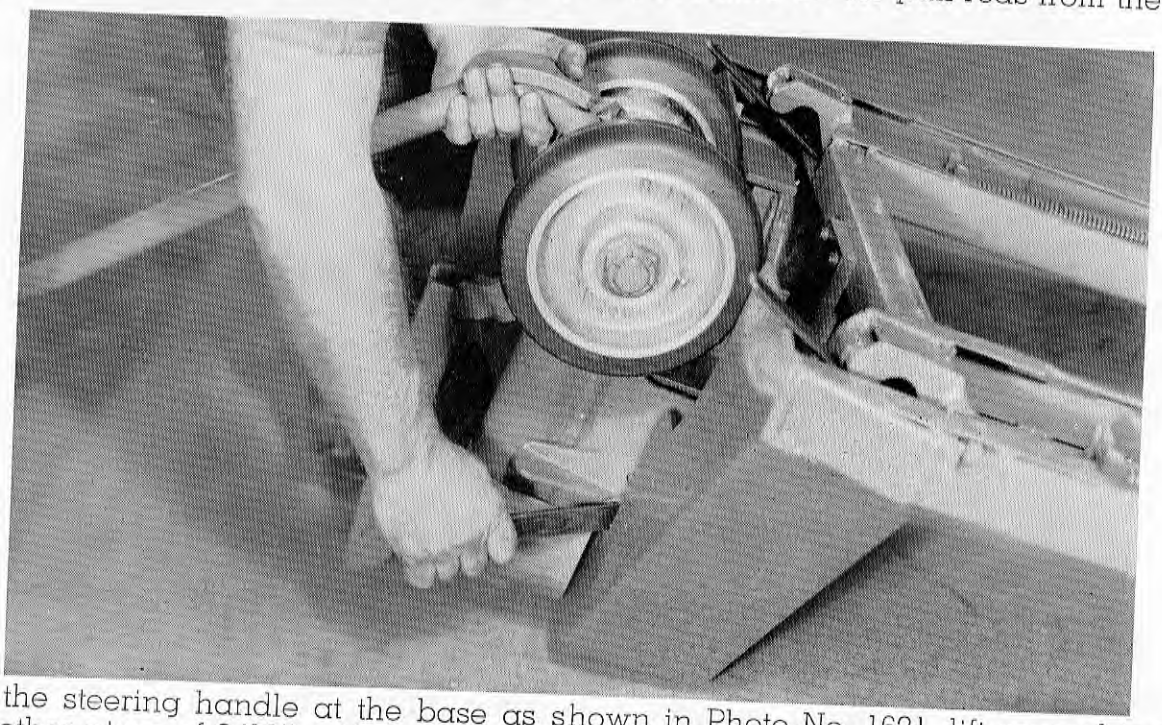

PHOTO No. 1621

Grasp the steering handle at the base as shown in Photo No. 1621, lift several inches and slip another piece of 3/16" x 1" flat between the head unit and the body directly below the release pedal. This will relieve pump spring pressure from hold down plate bolts.

SEE NEXT PAGE

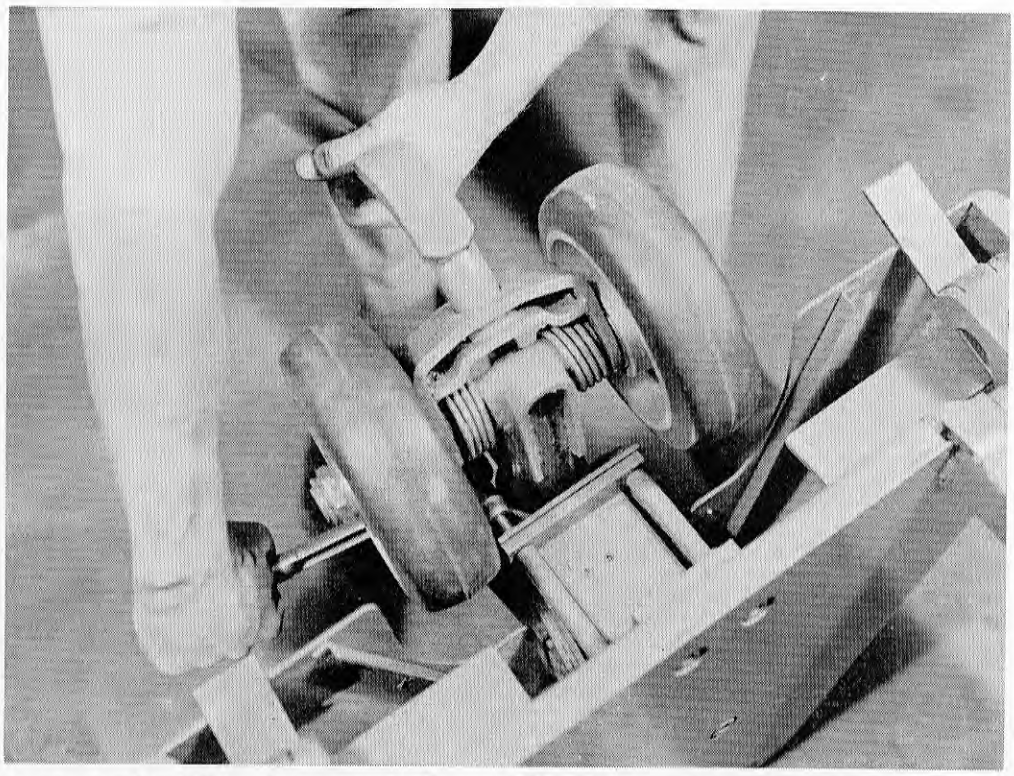

PHOTO No. 1622-A

Remove bolt on right side. Loosen bolt on left side to allow bracing flats to swivel.

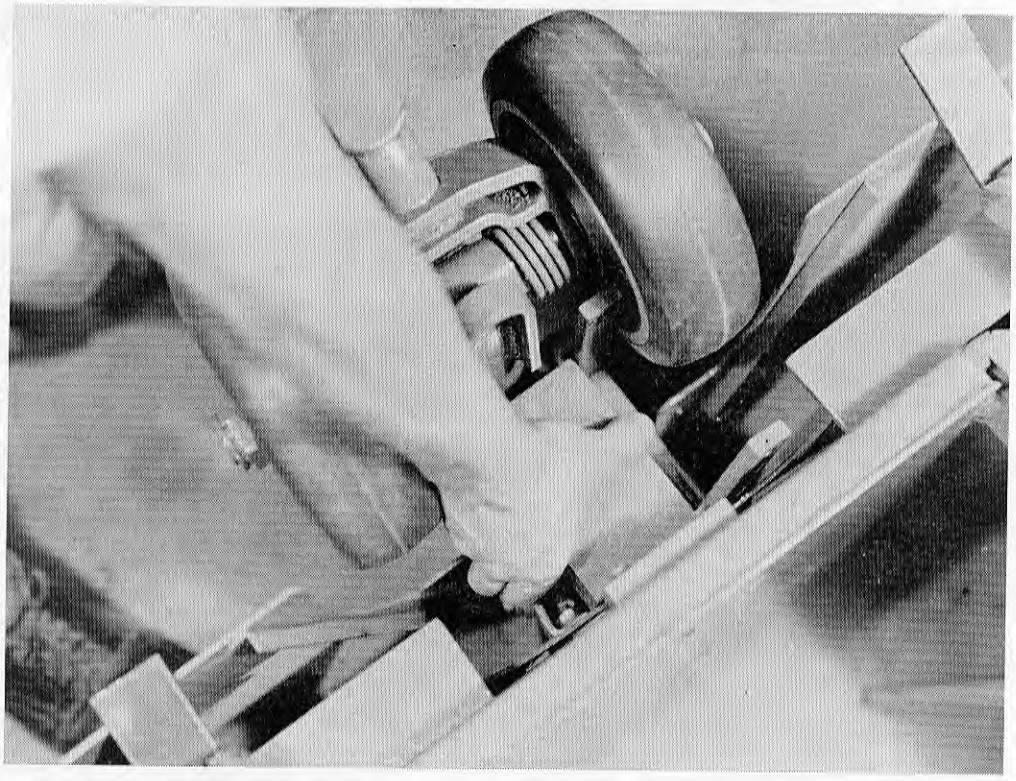

PHOTO No. 1623-A

Turn bracing flats to upright position and remove hydraulic unit.

Packing and other parts for the hydraulic unit can be ordered by referring to PBMD-137 in the Parts Catalog. However, complete replacement hydraulic units may be obtained from the factory on our exchange plan for a nominal cost. The factory recommends the exchange plan, but you have the option of ordering the parts and making your own repairs if you so desire.

BARRETT

LUBRICATION SPECIFICATIONS
ALL BARRETT INDUSTRIAL TRUCKS

NOTE: Products listed are Producers Recommendations, Not tested by Barrett-Cravens.

*Should perform satisfactorily, although Gulflex A does not conform with Specifications set forth for type "F" Lubricant

CODE	BARRETT PART NO.	GULF	CONTINENTAL	SINCLAIR	SOCONY-VACUUM	AMERICAN OIL	SUN OIL	TEXAS	MASTER LUBRICANT CO.	SHELL OIL CO.	HOUGHTON CO.
A	A-8789-2	Gulf Transmission Oil 90	Transmission Oil SAE 90	Sinclair Mineral Gear Oil SAE 90	Mobilube C 90	AMOCO Gear Lubricant #90	Sunvis 99	Texaco Thuban SAE 90	Lubriko SAE 90	Dentax #90	Hydro-Drive MIH 50
B	A-8789-7	Gulf Transgear Lubricant EP 140	Universal Gear Lubricant SAE 140	Penant E.P. Oil #6	Mobilube EP 140	Amer. Multi Purpose Gear Lube No. 140	Multi-Purpose Gear Lubricant SAE 140	Texaco Universal Gear Lubricant SAE 140	Lubriko SAE 140 EP	Spirax EP-140	Vital E.P. Gear Oil SAE 140
C	A-12012-4	Gulflex A	Super Lube	Litholine Industrial #2 or Litholine MP Grease	Mobilgrease #5 Mobilgrease MP	Super Permalube Grease	Sun 762 M.P. Wheel Bearing Grease	Texaco Marfax Multi-Purpose #2	Lubriko WBG	Darina AX	Cosmolube No. 2
D	A-12012-6	Gulflex A	Super Lube	Litholine Industrial #2 or Litholine MP Grease	Mobilgrease #5 Mobilgrease MP	Super Permalube Grease	Sun C-891-T Grease	Marfak Multi-Purpose #2	Master High Pressure Soft	Darina AX	Cosmolube No. 2
E	A-8789-8	SAE 10 Crankcase Oil Gulf Harmony 44	Hycom 15	Tenol SAE 10W or Rubilene HD Oil 10	Infilrex-101 (SAE 10W) or Delvac Oil 910	American HD-M Motor Oil SAE #10	Suntac 152	Texaco URSA Oil Heavy Duty SAE 10		Rotella #10	Hydro-Drive MIH 10
F	A-12012-7	Gulflex A*	Super Lube	Litholine M.P. Grease	Mobilgrease #5 Mobilgrease MP	Super Permalube Grease	Prestige 43 Grease	Texaco Marfak Multi-Purpose #2	Lubriko M-24-M	Darina AX	Cosmolube No. 2
G	A-8789-4	SAE 10 Crankcase Oil Gulf Harmony 44	Hycom 15	Duro Oil 150	Infilrex-101 (SAE 10W) or Delvac 910	American Industrial Oil No. 21	Sunvis 916	Texaco Regal Oil A (R & O)		Tellus 27	Hydro-Drive MIH 10
H	T-29-644	Gulf Harmony 53	Hycom 31	Duro Oil 300	DTE Heavy Medium or SAE-20	American Industrial Oil No. 31	Sunvis 931	Texaco Regal Oil PC (R & O)		Tellus 33	Hydro-Drive MIH 20
J	A-8789-6	Gulf No-Rust Eng. Oil SAE #10	Conoco #21260 Oil	Duro Oil 150	Infilrex-101 Oil or Delvac 910		Sunvis 916	Texaco Regal A (R & O)		Tellus 27	Hydro-Drive MIH 10
K	A-8636	Gulf Paramount 37	GP Spindle Oil Light	Sinclair Cadet Oil A	(MIL-O-5606) Mobil Aero Hydraulic Oil HFA	Indoil #7	Solnus 70	Texaco Capella-AA		Tellus 15	Kensington Spindle Oil No. 9
L	T-29-1476	Gulf Paramount 49	Conoco #21260 Oil	Duro Oil 160	Infilrex-101 (SAE 10W) or Delvac Oil 910	American Industrial Oil No. 31	Sunvis 747	Texaco Regal APC (R & O)	Melpar #19-CT	Tellus 27	MIH-10 Rust Inhibitor Type

PART LUBRICATED	CODE	LUBRICATION SPECIFICATIONS
Drive Axle (Oil Bath)	A	Straight Mineral Oil of SAE #90 Grade (Check Every 40 Hours-Drain Every 500 Operating Hours.)
Steering Gear	B	Mild Extreme Pressure SAE 140 Gear Lubricant
Wheel Bearings & Drive Wheel Gears (Pinion Type)	C	Medium Bodied High Temperature Wheel-Bearing Grease-Melting Point 250° Or Higher (Repack with Change of Tires.)
Grease Fitting Not Otherwise Listed	D	Chassis Lubricant (Service Every 40 Hours)
Lubricating Pivot Points	E	One Drop of SAE #10 Engine Oil Every 40 Operating Hours
Drive and Hoist Motor	F	Open Bearings should be removed, cleaned and repacked every 2000 Hours of operation or during overhaul period. Use a mixed High Temperature grease to the following recommendations. Oil Viscosity at 100 690-900 Saybolt Sec. ASTM Penetration 230-260 Consistency 250
Hydraulic System	G	SAE 10 Hydraulic Fluid (Vane Pump) (Check Oil level every 40 Hours.)
Hydraulic System	H	SAE-20 Hydraulic Fluid (Gear Pump) (Check Oil level every 40 Hours.)
Hydraulic System	J	SAE-10 Hydraulic Fluid (Piston Pump-Hand Trucks) (Check Oil level every 40 Hours.)
Hydraulic System (Freezer Applications)	K	73.8 Viscosity at 100 Hydraulic Fluid (Piston Pump Hand Trucks) (Check Oil level every 40 Hours.)
Hydraulic System (Freezer, Brine & Extreme Moisture)	L	SAE-10 Hydraulic Fluid (Gear Pump) (Check Oil level every 40 Hours.)

LUBRICATION CHART - MODEL HX

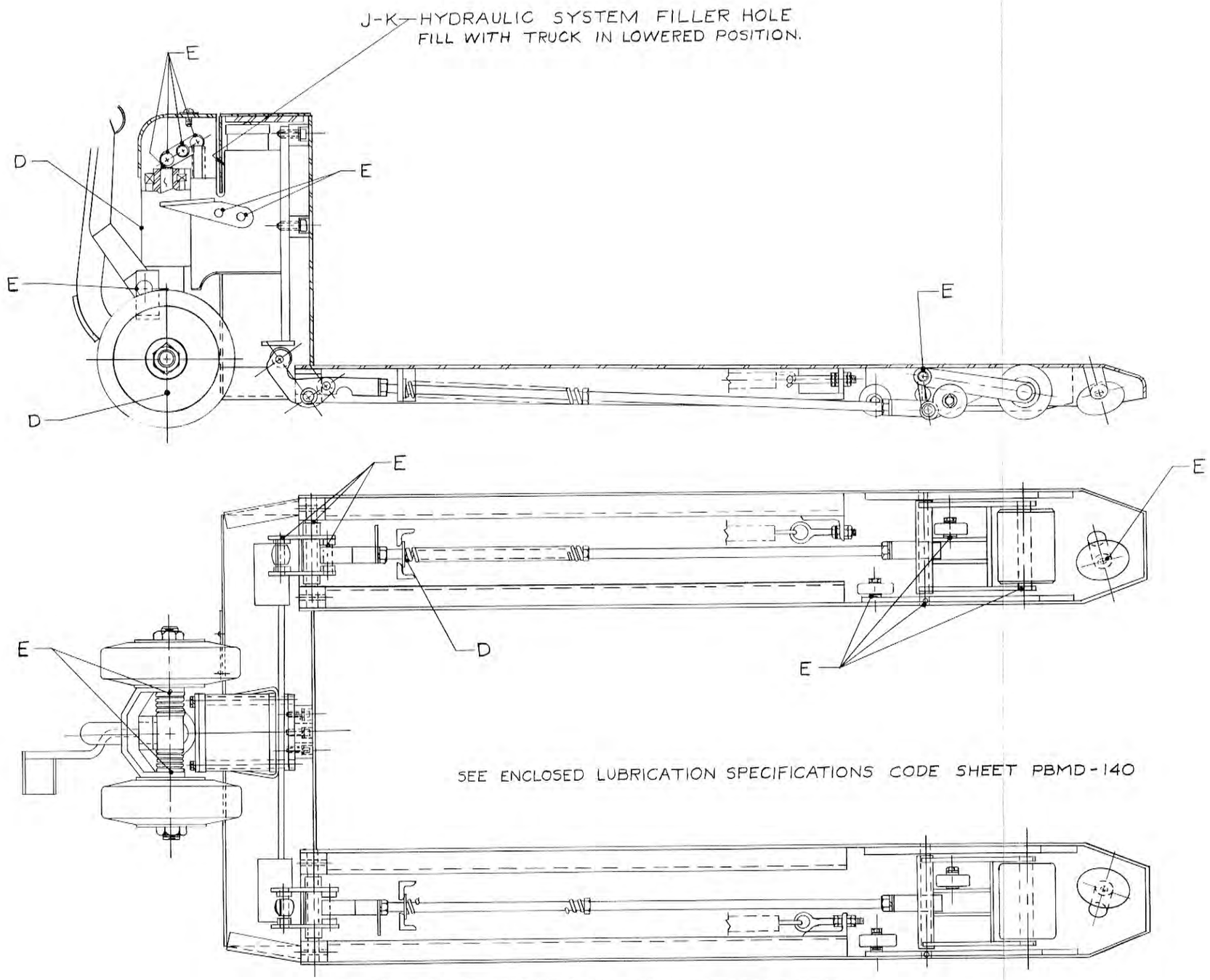

ALWAYS SPECIFY MODEL AND SERIAL WHEN ORDERING REPAIR PARTS

GENERAL ASSEMBLY
MODEL HX

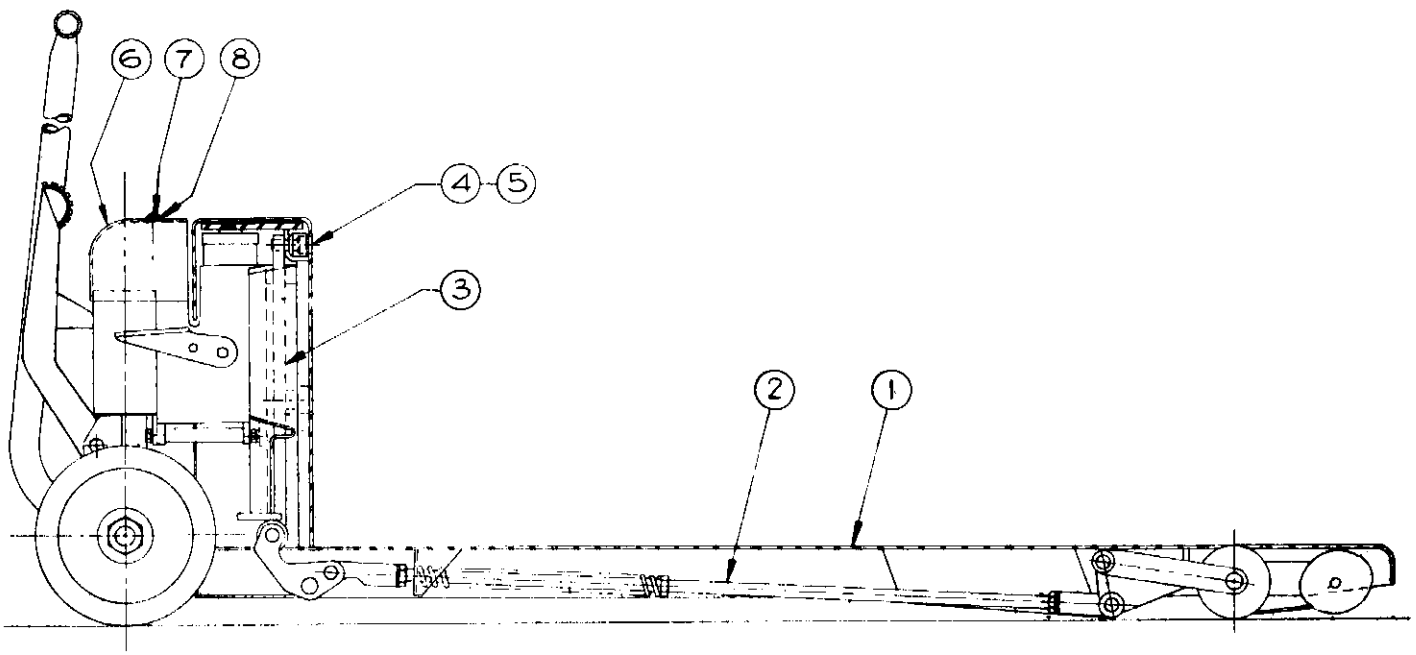

Item No.	Part No.	Description		Qty.
1		Frame (Specify Model & Serial No. of Truck)		1
2		Tie Rod		2
	SA-10344-A	32'' Frame		
	SA-10344-B	36'' Frame		
	SA-10344-C	42'' Frame	Left & Right	
	SA-10344-D	48'' Frame	(Identical)	
	SA-10344-E	54'' Frame		
	SA-10344-F	60'' Frame		
	SA-10344-G	40'' Frame		
	SA-10344-H	44'' Frame		
3	B-10331	Guide Rail		1
4	A-7086-8	1/2-20 x 1-1/4 Allen Head Cap Screw		5
5	A-7000-13	1/2 Lockwasher		5
6	C-10642	Cover		1
7	A-7108-10	5/16-18 x 3/4 Round Head Mach. Screw		1
8	A-7162-6	Flat Washer		1

Always specify model and serial number when ordering repair parts.

BARRETT

FRONT WHEEL & JACK ASSEMBLY - MODEL HX

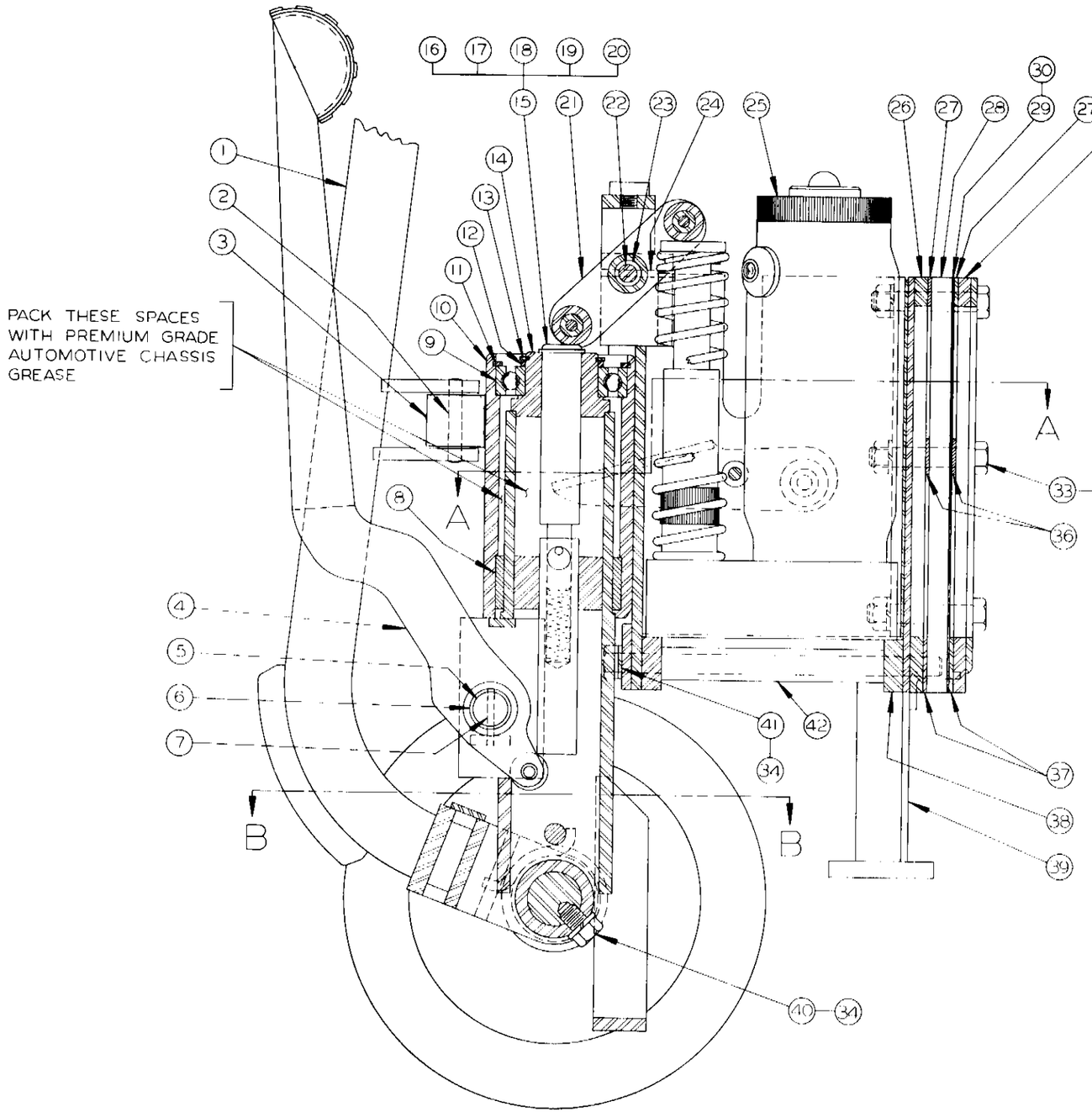

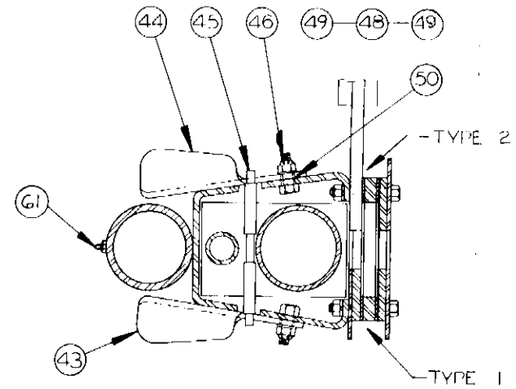

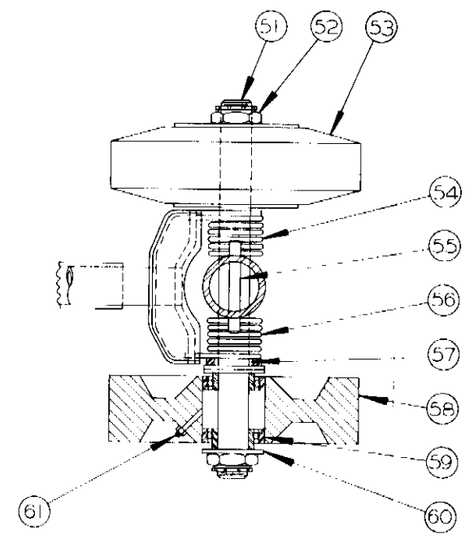

Item No.	Part No.	Description	Qty.
1	SB-10484	Handle Assembly	1
2	T-29-1432-C	Roll Pin	1
3	A-7493	Roller	1
4	SA-13386	Foot Lever Ass'y.	1
5	A-10520	Foot Lever Shaft	1
6	T-29-1475-G	Oilite Bearing	1
7	T-29-1115	Roll Pin	1
8	A-6597-127	Oilite Bearing	1
9	A-10630	Ball Bearing	1
10	SC-10496	King Pin Housing & Oilite Ass'y.	1
11	T-29-1440-H	Retaining Ring	1
12	A-10631	Bearing Spacer (Only Used on Early Models)	1
13	T-29-1442-G	Retaining Ring	1
14	D-13562	King Pin Ass'y.	1
15	SA-15611	Rocker Link Rod Ass'y.	1
16	A-10026	Snap Ring	
17	A-15609	Rocker Link Rod	1
18	A-15610	Rocker Link Rod	1
19	A-7660-26	Spring	1
20	T-29-1330	Roll Pin	1
21	SA-7643	Rocker Link Ass'y.	1
22	A-10573	Rocker Link Shaft	1
23	T-29-1475-J	Oilite Bearing	2
24	A-10350	Roll Pin	1
25		See Hydraulic Unit Page	1
26	B-10515	Carriage Plate Type 1	2
		Type 2	1
27	A-7314	Bearing Plate (Top)	2
28	A-10513	Carriage Rial	2
29	A-10514	Carriage Shim	2
30	A-8332	Steel Shim	2
33	A-7043-10	3/8-24 x 2" Hex. Head Cap Screw	6
34	A-7000-11	3/8 Lockwasher	9
35	A-7003-6	3/8-24 Hex. Jam Nut	6
36	A-7312	Spacer	2
37	A-7313	Bearing Plate (Bottom)	2
38	A-10525	Hydraulic Unit Supporting Flat	2
39		Carriage Gusset	1
	SC-10668-4	18" Wide Truck	
	SC-10668-3	20" Wide Truck	
	SC-10668-2	22" Wide Truck	
	SC-10668-1	24" Wide Truck	
	D-10203	27" Wide Truck	
	D-10203	30" Wide Truck	
	SC-13161-1	32" Wide Truck	
	SD-15453	48¼ Wide Truck	
	SB-9174-1	HD & HDK-6 (Shipped before 4-1-64)	
	SC-18319-1	HD & HDK-6 (Shipped after 4-1-64)	
	SB-9174-2	HD & HDK-7 (Shipped before 4-1-64)	
	SC-18319-2	HD & HDK-7 (Shipped after 4-1-64)	
	SB-9174-3	HD & HDK-9 (Shipped before 4-1-64)	
	SC-18319-3	HD & HDK-9 (Shipped after 4-1-64)	
40	A-7030-2	3/8-16 x ½ Hex. Head Cap Screw	1
41	A-7043-28	3/8-24 x 6½ Hex. Head Cap Screw	2
42	A-8992	Spacer	2
43	A-10528-1	R. H. Release Pedal	1
44	A-10527-1	L. H. Release Pedal	1
45	A-10530	Release Drive Pin	1
46	A-7042-5	5/16-24 x 7/8 Hex. Head Cap Screw	2
48	A-4530-9	5/16-24 Locknut	2
49	A-7162-6	5/16 Flat Washer	2
50	A-13140	Release Pedal Bearing	2
51	A-10517	Front Wheel Axle	1
52	A-4530-20	1"-14 Locknut	2
53	SA-10420	Front Wheel (Rubber)	2
54	A-10534	L.H. Handle Hold Up Spring	1
55	A-10473	Spring Stop	1
56	A-10535	R.H. Handle Hold Up Spring	1
57	A-10251	Bushing	2
58		Front Wheel	2
	A-6592	Barcrava	
	A-11151-2	Barathane	
	A-6589	Aluminum	
	A-6867	Steel	
59	A-6588	Front Wheel Bearing	
60	T-20-21	Front Wheel Washer (For Barathane Wheels Only)	6
	T-20-21	(For Barcrava Wheels Only)	4
61	A-8513	Alemite Fittings	3

ALWAYS SPECIFY MODEL AND SERIAL WHEN ORDERING REPAIR PARTS

FRONT LINK SECTION
HX MODELS

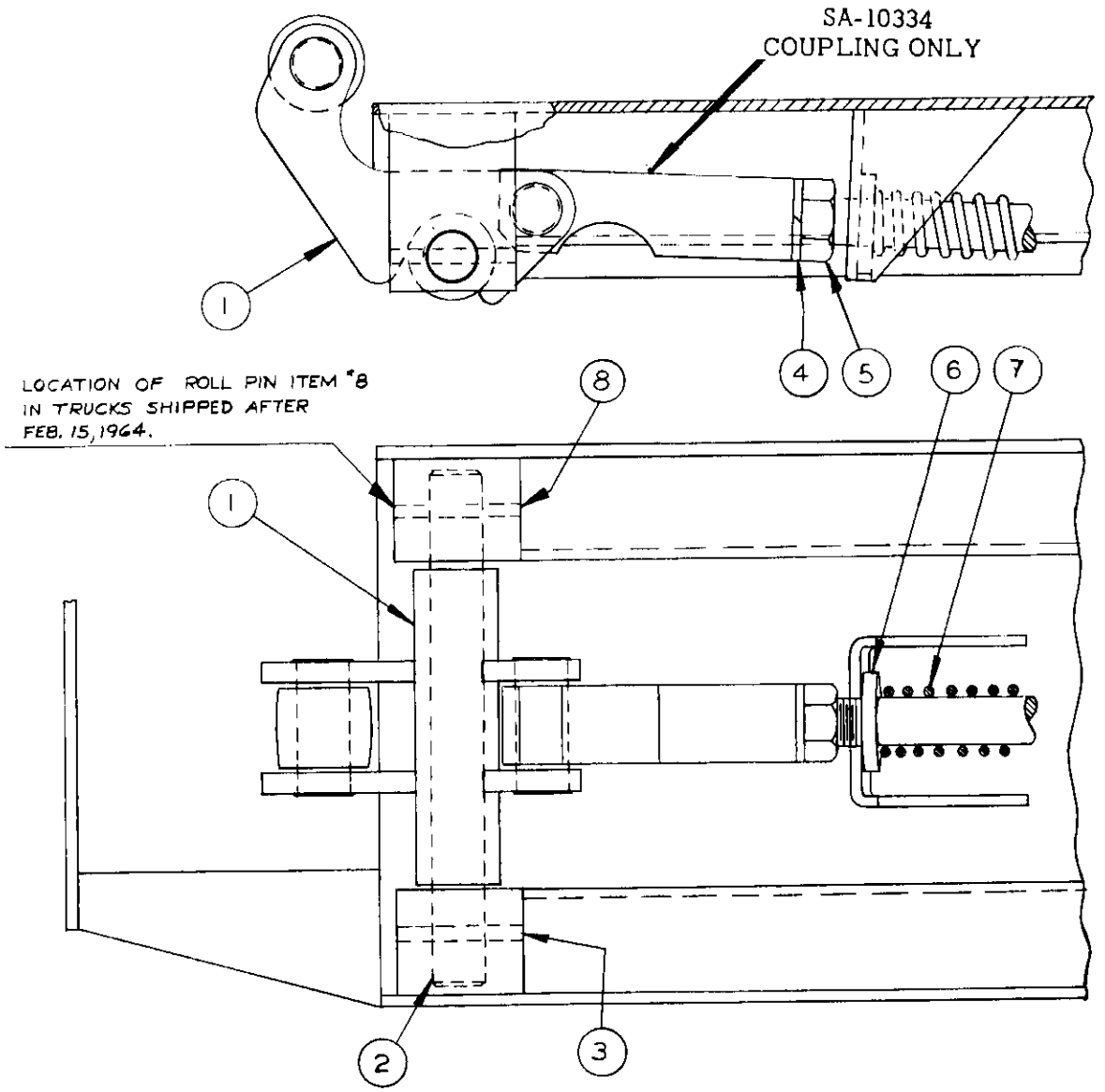

Item No.	Part No.	Description	Qty.
*1		Link Roller & Coupling Ass'y.	
	SA-6920	All Models Except 30" Wide	2
	SA-9534	30" Model Only (Left Hand)	1
	SA-9535	30" Model Only (Right Hand Shown)	1
*2	A-10234	Front Link Shaft	2
*3	A-10352	Roll Pin	2
4	A-7000-14	9/16" Lockwasher	2
5	A-7003-12	9/16-18 Hex. Jam Nut	2
6	A-12452	Washer	2
7	A-10294	Spring	2
8	T-29-1428-H	Roll Pin	2

* When replacing Item 1 or 2 also replace Item 3.

ALWAYS SPECIFY MODEL AND SERIAL WHEN ORDERING REPAIR PARTS

REAR LINK & WHEEL SECTION
FOR HX MODELS ONLY

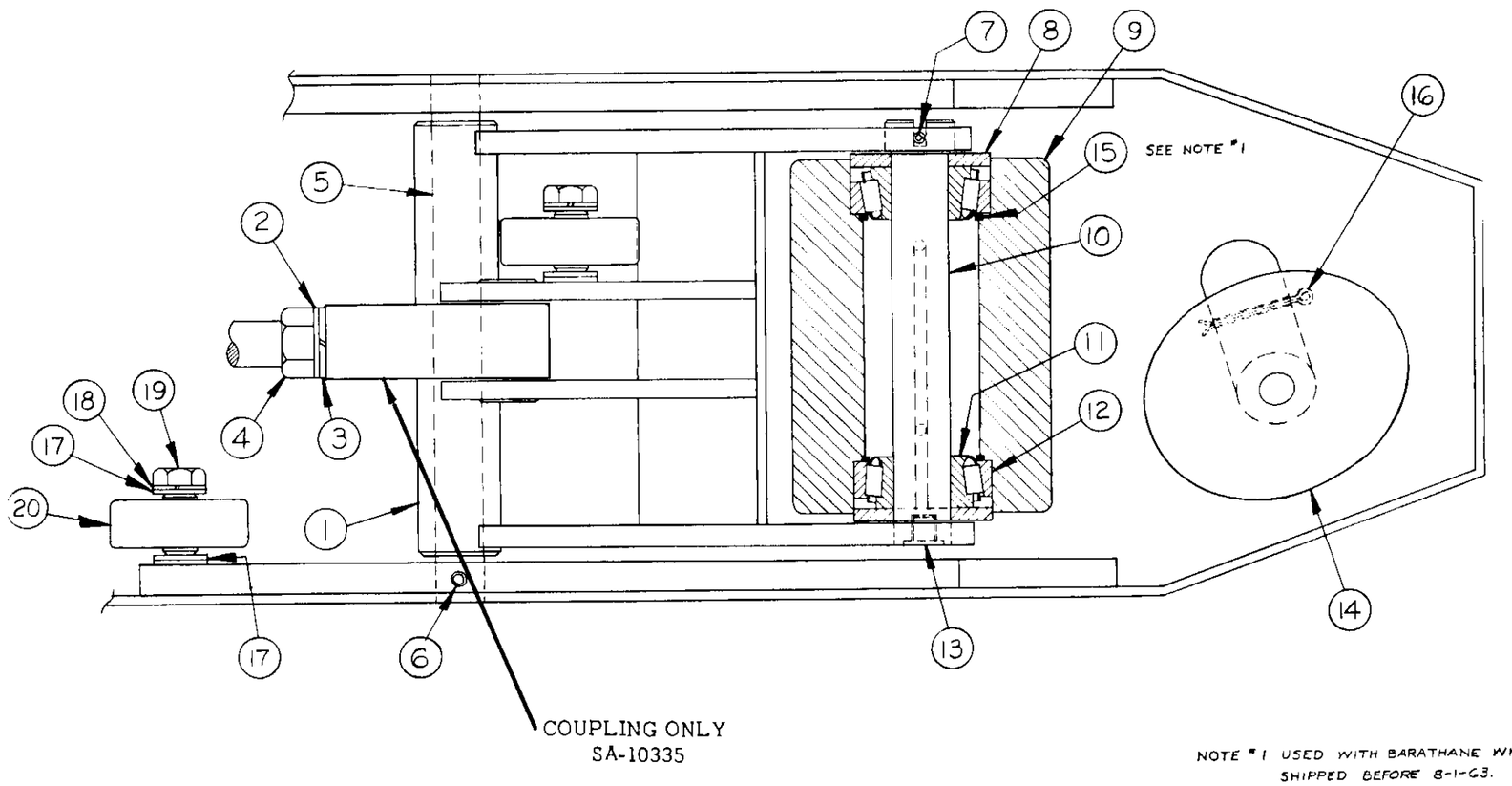

Item No.	Part No.	Description	Qty.
1	SA-13762	Rear Link & Bearing Assembly	2
2	T-20-442	Washer	2
3	A-7000-14	9/16 Lockwasher	2
4	A-7606-12	9/16-18 L.H. Hex Jam Nut	2
5	A-10238	Rear Link Shaft	2
6	A-10351	Roll Pin	2
7	A-10350	Roll Pin	2
8	A-10141	Wheel Washer	4
9	A-10434	Aluminum Wheel	2
	A-9988-8	Barathane Wheel	2
10	A-10240	Rear Axle	2
11	A-10680-16	Bearing Cone	4
12	A-10681-13	Bearing Cup	4
13	T-29-1336	Alemite Fitting	2
14	SA-11178	Flying Saucer	2
15	A-17768	Snap Ring (Use with Barathane Wheel Only)	4
16	A-7168-5	3/16 x 1 1/2 Lg. Cotter Pin	2
17	A-7162-6	5/16 Fl. Washer	6
18	A-7000-10	5/16 L. Washer	2
19	A-7042-8	5/16-24 H.H.C.S. 1 1/2 Lg.	2
20	A-19451-1	Roller	4

NOTE #1 USED WITH BARATHANE WHEELS SHIPPED BEFORE 8-1-63.

HYDRAULIC UNIT ASSEMBLY, MODEL HX

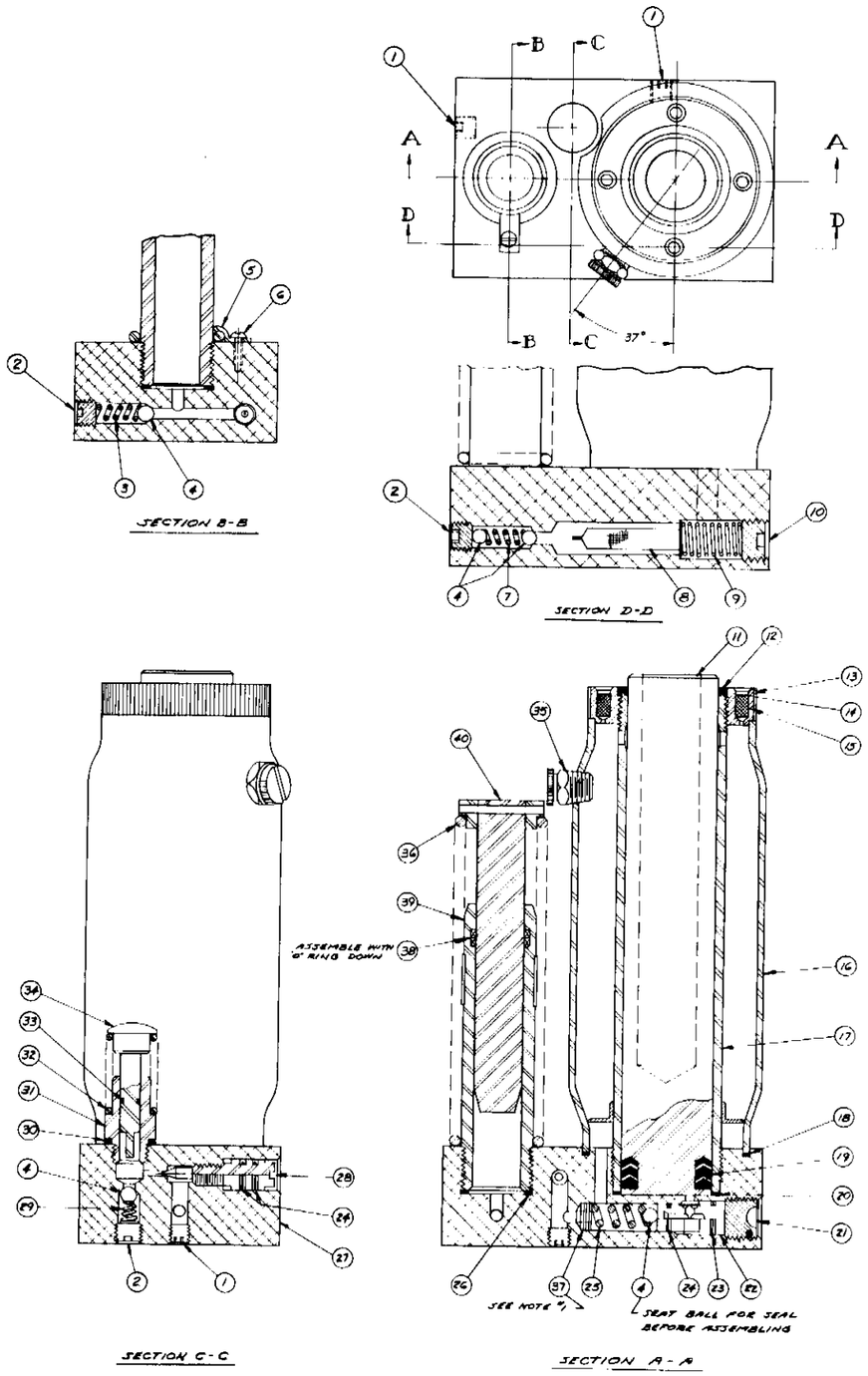

NOTES

#1 SHIM AS REQUIRED WITH WASHERS ON 4500# UNIT ONLY SD-21482-1

	Part No.	Pump Dia.	Ram Dia.	No. of Strokes	Description
BW	SD-21482-1	5/8	1-3/8	11	3000# & 4500# Trucks

Item No.	Part No.	Description	Qty.
1	A-5589-1	Pipe Plug	3
2	A-5589-2	Pipe Plug	3
3	T-17-197	Spring	1
4	T-29-220	Ball	5
5	C-2555-H	Clip	1
6	A-7099-5	#6-32 x 3/8 R.H.M.S.	1
7	A-10582	Valve Spring	1
8	SA-15671	Filter	1
9	A-7660-24	Filter Spring	1
10	A-15879-4	3/8-18 Flush Seating P.P.	1
11	B-6392	Ram Piston	1
12	A-5871	Wiper Ring	1
13	A-5866	Vent Nut	1
14	A-5870	Vent Plug	4
15	A-5867	Filter	4
16	C-15632	Reservoir	1
17	SA-5895	Ram Cylinder Ass'y.	1
18	T-29-1413-J	"O" Ring	1
19	A-6393	Ram Packing	1
20	A-10568	Ram Gasket	1
21	A-9159	Relief Valve End	1
22	B-9158	Relief Valve Body	1
23	T-29-1413-H	"O" Ring	1
24	C-3068-B	"O" Ring	3
25	A-7660-1	Relief Valve Spring	1
26	A-10567	Pump Gasket	1
27	D-15672	Hydraulic Unit Ass'y.	1
28	A-10607	Valve Needle	1
29	A-10583	Release Valve Spring	1
30	A-10570	Release Guide Gasket	1
31	A-10551	Release Plunger Guide	1
32	A-10106	"O" Ring	1
33	A-10584	Release Return Spring	1
34	A-10554	Release Plunger	1
35	A-16600	Filler Plug	1
36	A-10611	Piston Return Spring	1
37	A-7162-2	#8 Fl. Wash.	4
38	A-21456-1	Packing	2
39	B-21455-2	Pump Cylinder	1
40	SA-21478	Pump Piston Ass'y.	1